Hubs, Switches, and Routers

Ken Wong and Jim Brunetti
Network Systems Branch
October 1997

	TCP/IP		OSI
FTP, Telnet, SMTP, Bootp, TFTP, DNS, SNMP, NIS, NFS	Application		Application Presentation Session
TCP, UDP	Transport		Transport
EIGRP, OSPF, RIP	Routing		Network
IP, ARP, RARP	Internet		
802.2, SNAP	LLC		Link
802.3, 802.5, FDDI	MAC		
Twisted Pair, Fiber	Physical		Physical

Introduction

- LAN Protocols- Ethernet, Fast Ethernet, Gigabit Ethernet, FDDI
- Good Network Design
- Pros and Cons of Hubs, Switches, and Routers
- Virtual LANs (VLANs)
- Demos

Topics

- LAN Protocols
  - Ethernet
  - Fast Ethernet
  - Gigabit Ethernet
  - FDDI
- Network Design
  - 10Base T Hubs
  - Switches

Ethernet

- Operates at 10 Mbps
- Uses Carrier Sense Multiple Access (CSMA) as the media access method
  - Senses activity before sending
  - If busy, wait before transmitting

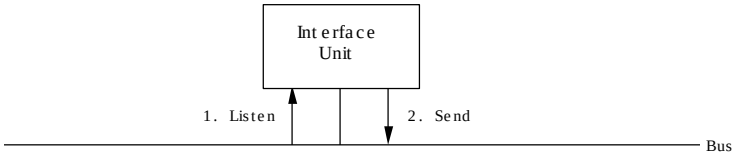

- Ethernet with CSMA operates with Collision Detection (CD)
  - Minimum frame length (64 bytes) ensures proper Collision Detection
  - Maximum frame length (1518 bytes) prevents one station from monopolozing the medium

Ethernet Collisions

- Even with Collision Detection, collisions will occur
- Effect of collision minimized by aborting transmission after a detected collision

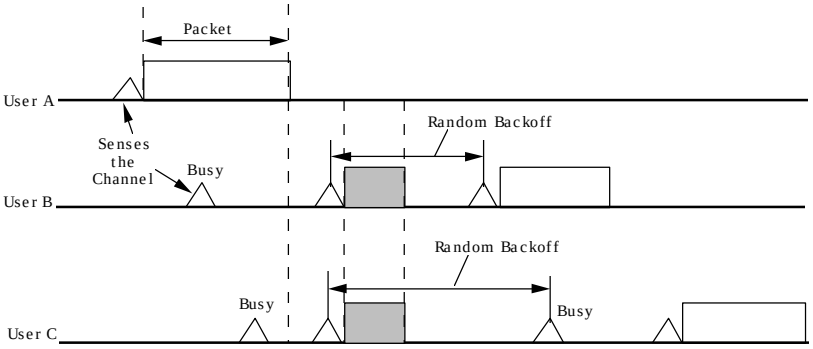

Ethernet

- Random timeout before trying to retransmit
- Truncated Binary Exponential Backoff Algorithm
  - On consecutive collisions, double average timeout up to 10 time
- Backoff is a congestion control mechanism
  - Keeps traffic off the network during heavy loads
- Few packets encounter long delays due to backoff
  - However, cannot guarentee upper bound on access time
- Maximum of active nodes on a LAN is 1024 nodes
  - Based on backoff algorithm effectiveness

Ethernet Variations

- Variations are often expressed in the form of :

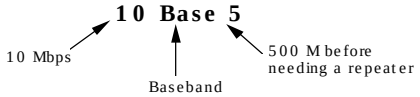

Ethernet Pros and Cons

- **Pros**
  - Simple to Implement
  - Simple Algorithm
  - Cheap
  - Good Performance under moderate Load
  - Industry De-facto Standard
  - NSB experience
- **Cons**
  - Performance degrades at approx 50%
  - Non-Deterministic Access
  - Time Sensitive Traffic may be delayed

Fast Ethernet

- 100 Mbps Data Rate
- Half and Full Duplex Modes
- Operates over UTP and Fiber
  - 100 Base T - 100 m on 2 pair Cat 5 UTP
  - 100 Bast T4 - 100 m on 4 pair Cat 3 UTP
  - 100 Base FX - 400 m half duplex on multi-mode fiber
  - 100 Base FX - 2 Km full duplex on multi-mode fiber
  - 100 Base FX - 20 Km full duplex on single mode fiber
- Actual Date Rate is 125 Mbps
  - Uses 4B/5B encoding

Fast Ethernet

10 Mbps Ethernet vs. 100 Mbps Ethernet

	10 Mbps	100 Mbps
Bit Time	100 nsec	10nsec
Collision Diameter (bit times)	512	512
Maximum Round-Trip delay	51.2 usec	5.12 usec
Maximum Repeater Free Diameter	4000 m	412 m
Minumum Packet Size	64 byte	64 byte
Maximum Packet Size	1518 byte	1518 byte

Ethernet Auto-Negotiation

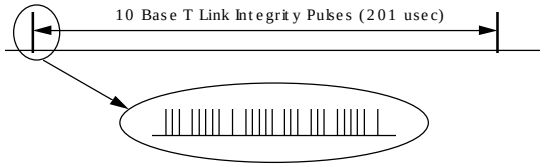

- 10Base T
  - Sees this as a Link Test, and responds with Normal Link Pulse (NLP)
  - If NLP received, link type set to 10BaseT
- 100Base T
  - Sees this as Fast Link Pulse
  - Encodes with link type information

Ethernet Link Types

- Link Types

1	100BaseT	Full Duplex
2	100BaseT	Half Duplex
3	100BaseTx	Full Duplex
4	100BaseT4	
5	100 BaseTx	Half Duplex
6	10BaseT	Full Duplex
7	10BaseT	Half Duplex

Fast Ethernet Repeaters

- Class I Repeater
  - Relaxed Timing Constraints within repeater
    - 10/100 translation, stacking possible
  - Only one repeater permitted within end systems

- Class II Repeater
  - Tighter timing constraints within repeater
  - 2 repeaters permitted between end systems
    - If all links < 100m - may have 3 repeaters

Fast Ethernet Pros and Cons

- **Pros**
  - Easy Step Up in Performance
  - Compatible with existing Ethernet
- **Cons**
  - Temptation to over-flatten network

Gigabit Ethernet

- Standards Body has full Draft Specification
- 1 Gbps Data Rate
- Full and Half Duplex Modes
- Fiber-Based to Start
  - Short Wave Length (~800nm)
    - 300m on mm fiber
  - Long Wave Length (~1300nm)
    - 550m on mm fiber
    - 3km on sm fiber
- Same Max Packet Size as "other" Ethernets

Gigabit Ethernet

100 Mbps Ethernet vs. 1 Gbps Ethernet

	100 Mbps	1 Gbps
Bit Time	10nsec	1nsec
Collision Diameter (bit times)	512	4096 *
Maximum Round-Trip delay	5.12 usec	4.09 usec *
Maximum Repeater Free Diameter	412 m	400 m
Minumum Packet Size	64 byte	64 byte *
Maximum Packet Size	1518 byte	1518 byte

* Must be padded to 512 bytes on half Duplex Links

Half Duplex Gigabit Ethernet

- Includes carrier extension to 512 Byte Minimum Packet Duration on wire

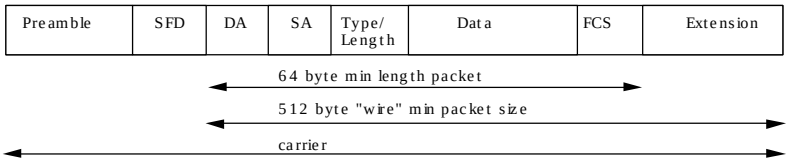

- Burst Mode
  - Reduces Effect of Extension
  - Packets can be attached to end of extension
  - Added packets must start within 1500 bytes of beginning of 1st packet

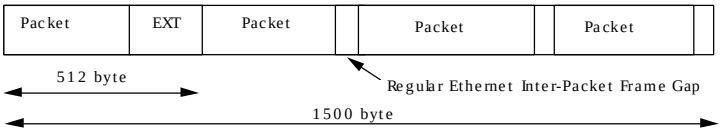

Gigabit Ethernet

- Support for Copper is hard
- Standard will include 25m support over twinax cable
- 100m CAT 5 Support 1-2 years away
  - May be more expensive than fiber
  - Can be used with installed infrasturcture

Gigabit Ethernet Pros and Cons

- **Pros**
  - High Speed
  - Ethernet Compatible
  - Comparatively low Cost
  - Simple
- **Cons**
  - Small Frames
  - Pre-standard

Fiber Distributed Data Interface (FDDI)

- 100 Mbps, Fiber Optic, Token-Passing Ring
- Can be implementing using Dual Counter-Rotating Ring Topology
  - Provides "Self-Healing"
- Design Options
  - Closed Ring
  - Dual Homed
  - Station Types - A, B, M, S
- Target Areas
  - Backbone
  - Metropolotian Area Networks (MANs)
  - High Speed LANs

FDDI Operation

- Node wanting to Transmit
  - Waits to receive token
    - After Receiving Token
      - Sends Packet(s)
      - Sends Token
  - Sender strips its own frame from network
- Aggregate and Peak rate of 100 Mbps
- Some devices support full duplex
- Self Healing for fiber breaks (for Dual Attached rings)
- Minimum frame size of 25 bytes and maximum of 4500 by

FDDI Operation - Example

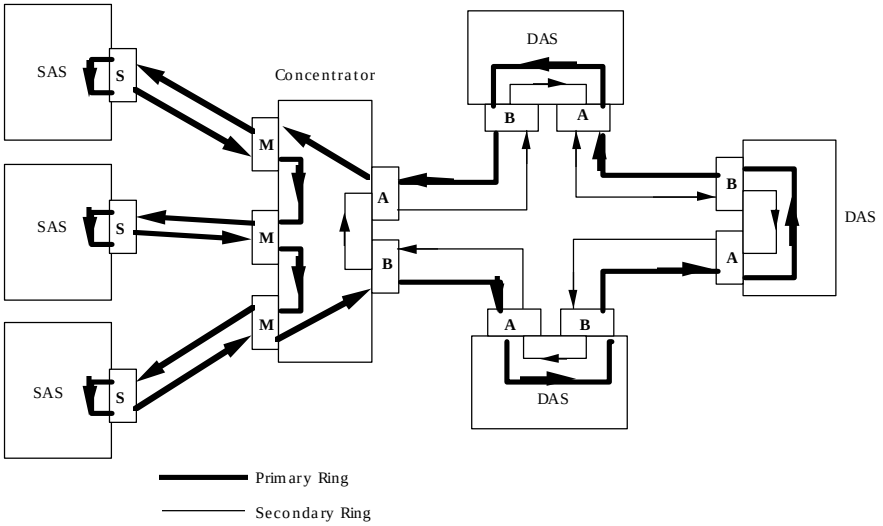

FDDI Operation - Example

Ring Re-configuration due to Cable Faults

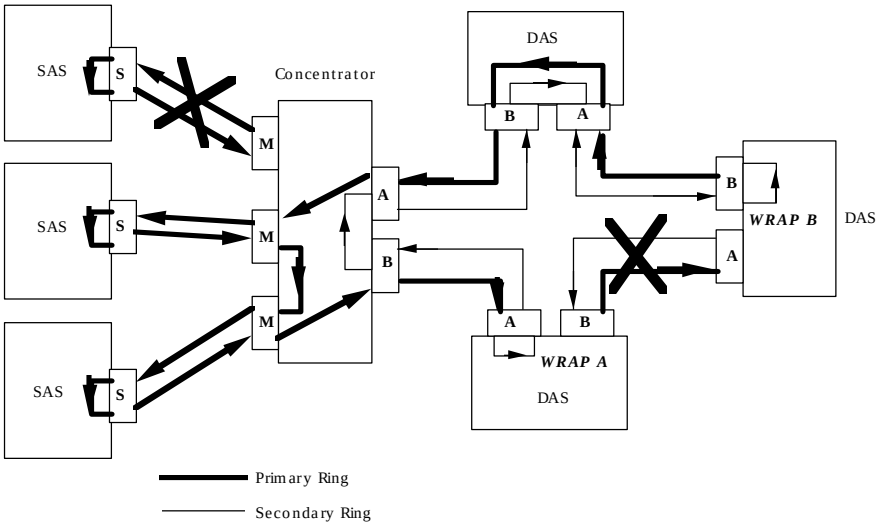

FDDI Pros and Cons

- **Pros**
  - Mature Technology
  - Long Distance
    - 2Km per hop, 200KM ring for mm
    - 60Km links on sm
  - Self healing from cable faults for dual attached rings
  - High Utlization Possible (~90%)

- **Cons**
  - Cost
    - Expensive interfaces, concentrators, switches
  - Complex station management
  - Not seen as future technology

10Base T Wiring

- Structured Wiring Standard EIA/TIA-568
  - Commercial Building Telecommunications Wiring Standard
  - Describes structured wiring using star topologies for voice and data
  - Recognizes 3 types of cable
    - 4 pair 100 ohm UTP
    - 2 pair 150 ohm STP
    - 62.5/125 multimode fiber
- Pre-Wire Building to support
  - Multiple user needs
  - Movement of users (adds, moves, changes)
- Voice and data "Information" Outlet

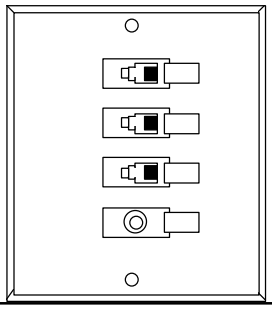

Typical Wiring Strategy

- Terminals connect to Wall Outlets
- Wall Outlets are connected to Wire Closets
- Wire Closets connected to Central Wiring Closet
  - Central Wiring Closet typically in basement
- Result is a star topology

Topology

- Star Wiring Topology
  - UTP wiring
  - Each node wired to a hub port
  - Point to point wiring
  - Simplifies troubleshooting
  - Hub repeats signals to all nodes

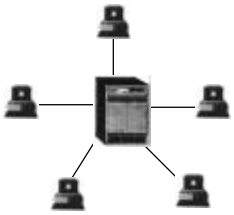

- Multiple Hubs in a Star Topology
  - Horizontal Distribution Hubs (IDF)
  - Vertical Distribution Hub (MDF)
  - Connected via fiber

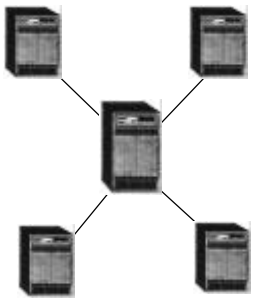

10Base T Repeater Hops

- Repeater Hops
  - Packet enters a port
    - Hub RIC counts as 1/2 hop
  - Crosses Ethernet Backplane
    - Backplane counts 0 hops
  - Exits a second hub port
    - Exiting RIC adds 1/2 hop
  - Total of 1 hop from A to B

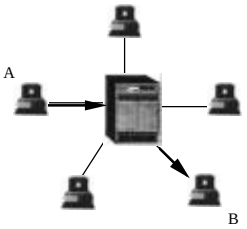

- 3 Hop Network Design
  - Packet from A to B crosses a maximum of 3 hubs
  - Maximum of 3 hops between nodes

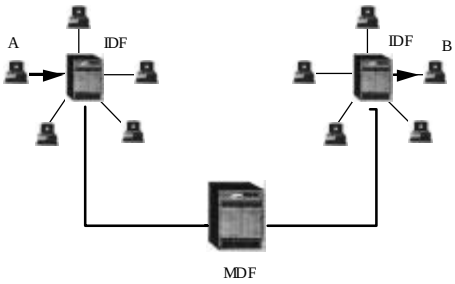

Building Backbone Network

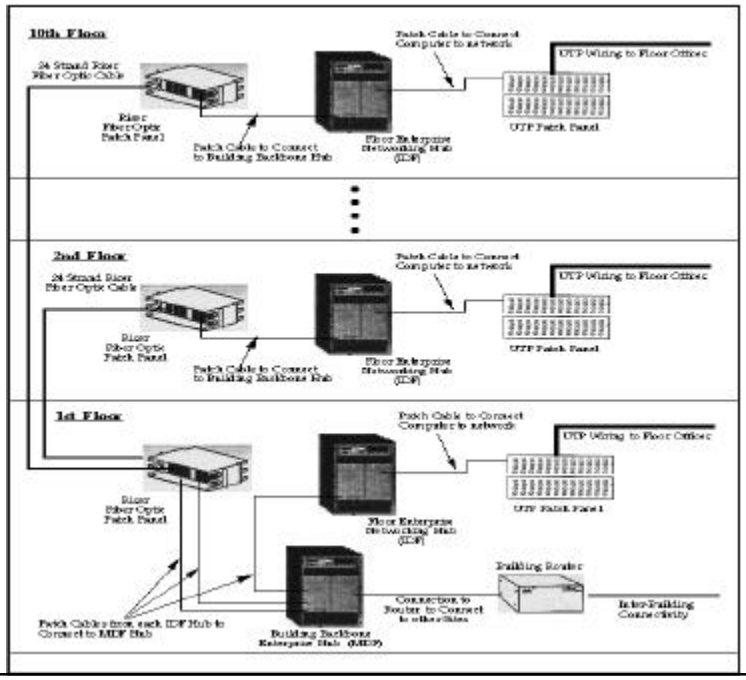

Switched Ethernet

- Drop-in replacement for shared ethernet Hub
  - No network architecutral change required
- Move from shared to dedicated bandwidth
- Big Performance Gain
  - Subnet goes from 10 Mb to N*10 Mb
  - Peak Bandwidth still 10 Mb
- Most operate at "Wire Speed"
- Many have 100Mb uplinks

Ethernet Switch Functions

- Operates same as bridge
- Watch source MAC addresses of all packets
- Flood broadcast and multicast packets
- Flood any packet if destination is not in table
- Drop packet if received on port in table
- Else forward packet to listed port

Congestion

- Switches do not avoid congestion
- Multiple input packets can be destined to same output
- Excess packets can be buffered
  - some switches have small buffers resulting in pack loss
- Active flow control an option in some devices

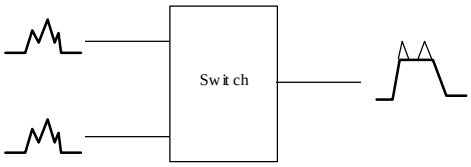

Active Flow Control

- Back pressure used to stop transmitter
  - Forces a collision
  - Asserts a carrier
- Must effect actual sender to be effective
- Bad idea to do this to a hub
- Changes system latency
  - Will effect latency to user
  - May effect TCP flow control

Ethernet Switch Features

- Switch Architecture
  - Frames vs. Cells
- Parallel Switching Paths
- Some have cut-through mode
  - Start sending before packet fully received
  - Will forward collision
  - Will forward packets with bad CRCs
- Some have fragment-free mode
  - Wait 64-times
  - Will not forward collisions
- Hundreds of ports
- Multicast Support
  - IGMP used to segment multicast forwarding
  - Nodes register groups to receive
- Basic Bridging Support
  - 802.1d Spanning Tree Algorithm
  - MAC address handled by a single port
    - 8-25 addresses are workgroup switches
- VLAN Support
- Fault Tolerance
  - Hot Swappable Components
  - Hot Standby Ports
- Flow Control
  - Traffic buffering
- SNMP Managment
  - Check for MIB compliance
  - MIB II, bridge MIB, ethernet MIB
- RMON and RMON II Support
  - Stats, History, Event, and Alarm
  - Hosts, HostTopN, Matrix, and Filter
  - Capture
    - "Sniffer" capability
    - Port Mirroring Capability

Switched Ethernet Pros and Cons

- **Pros**
  - Dedicated bandwidth to node
  - Drop in replacement for hubs
  - Security Isolation
  - Simple Operation
  - High aggregate bandwidth
- **Cons**
  - Peak bandwidth 10Mbps
  - MIB issues with some

Multicast

Multicasting is an efficent means of sending data to multiple receivers of the same

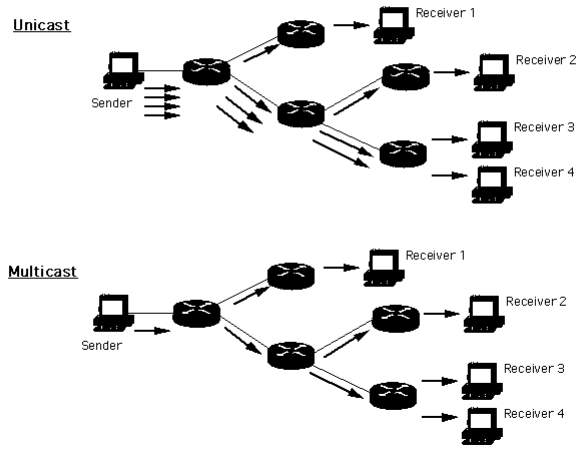

NIH Multicast Configuration

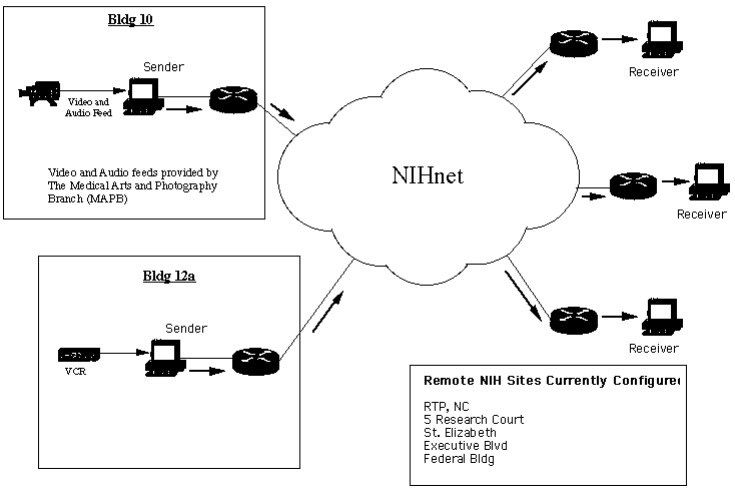

The Difference between Layer 2 Switching and Routing

- How a Router works
- Router pros and cons
- Layer 3 (IP) Switching

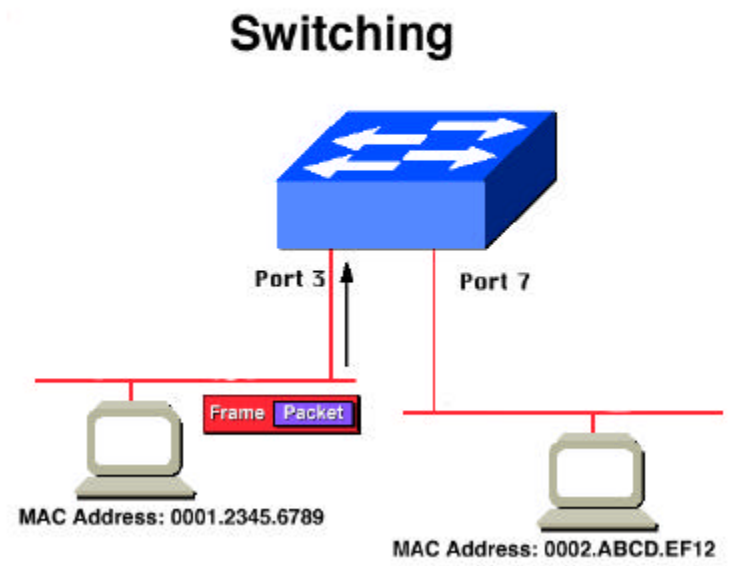

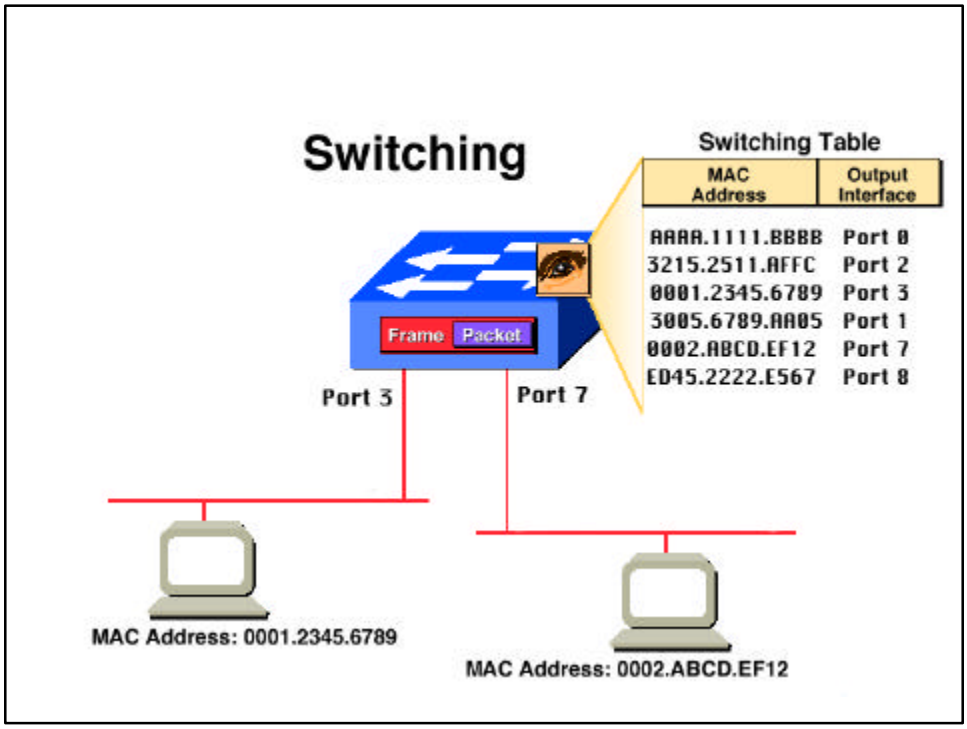
Switching
Switching Table
MAC Address
Output Interface
AAAA.1111.BBBB Port 0
3215.2511.AFFC Port 2
0001.2345.6789 Port 3
3005.6789.AA05 Port 1
0002.ABCD.EF12 Port 7
ED45.2222.E567 Port 8
Frame
Packet
Port 3
Port 7
MAC Address: 0001.2345.6789
MAC Address: 0002.ABCD.EF12

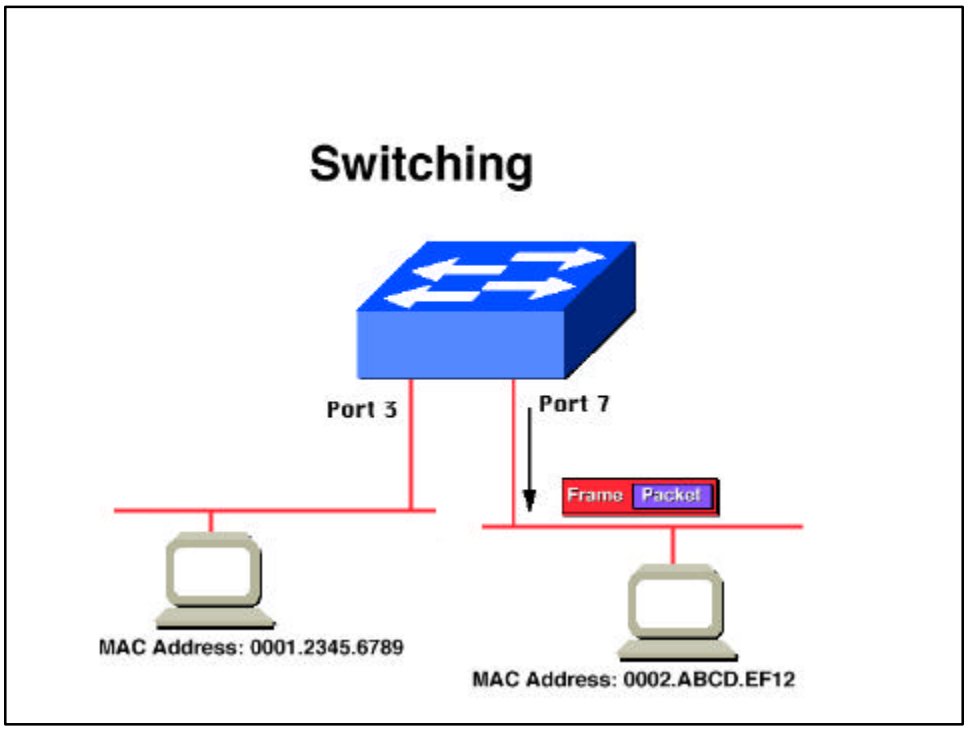
Switching
Port 3
Port 7
Frame
Packet
MAC Address: 0001.2345.6789
MAC Address: 0002.ABCD.EF12

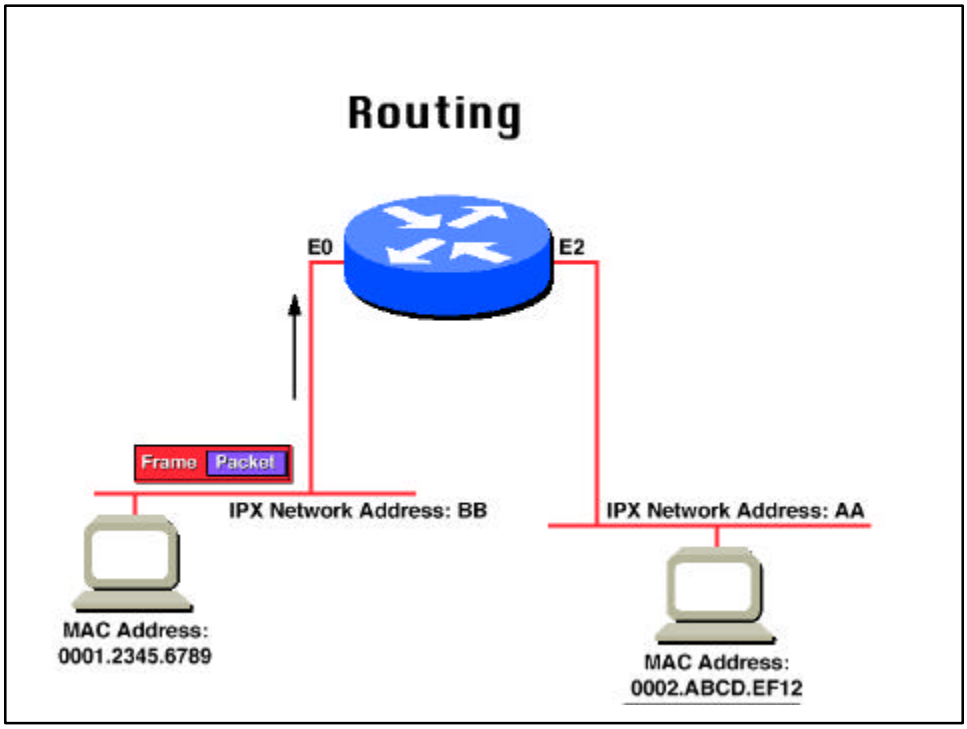
Routing
E0
E2
Frame
Packet
IPX Network Address: BB
IPX Network Address: AA
MAC Address:
0001.2345.6789
MAC Address:
0002.ABCD.EF12

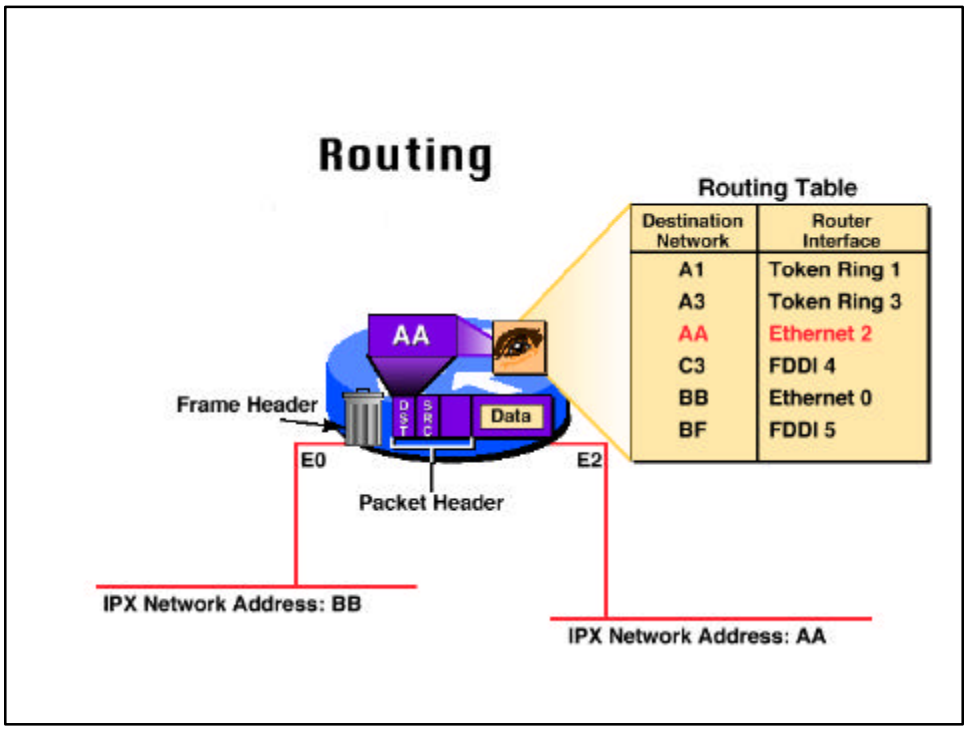
Routing
Routing Table
Destination Network
Router Interface
A1
Token Ring 1
A3
Token Ring 3
AA
Ethernet 2
C3
FDDI 4
BB
Ethernet 0
BF
FDDI 5
AA
Frame Header
DST
SRC
Data
E0
E2
Packet Header
IPX Network Address: BB
IPX Network Address: AA

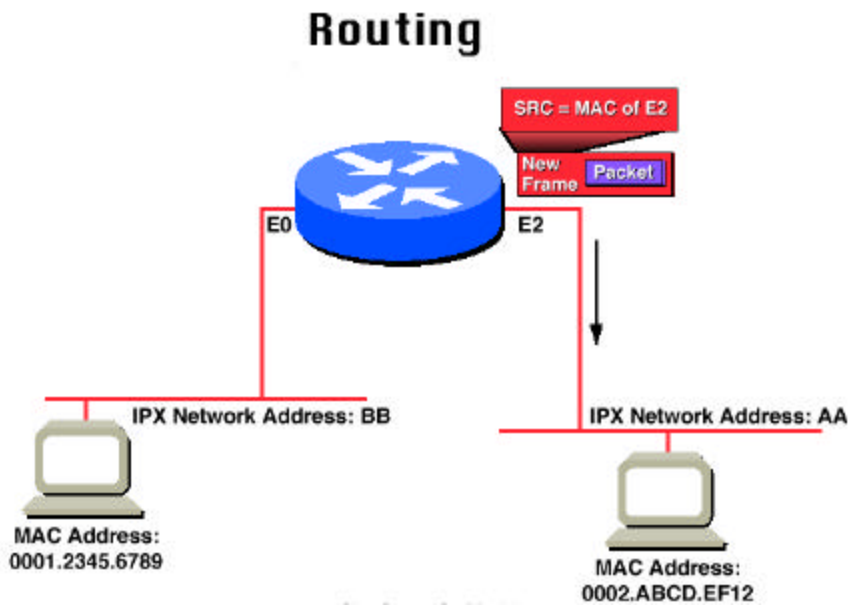

Router Pros

- Routers provide isolation from Broadcast storms and other ICDs ;-)
- Routers can be used as Packet Filtering Firewalls.
- Routers “route” packets through the network intelligently.
- (Our) Routers can do multicasting (PIM)

Router Cons

- Each packet has to be processed and the frame changed
- Routers WILL become the bottleneck on the network
- Each Router hop adds latency
- Software and Routing protocols are complicated

Layer 3 (IP) Switching

- Combines Routing with ATM Switching
- Based on Packet Flows
- Can Switch millions of packets/second at Layer 3
- Ipsilon is attempting to create an Internet standard using their technology

Layer 3 Switching

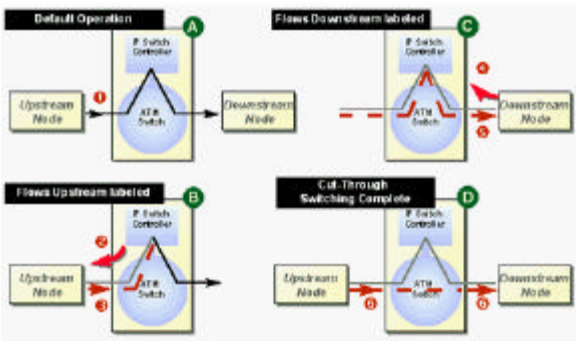

Virtual LANs

Constraints of Shared LANs

Users Are Physically Bound

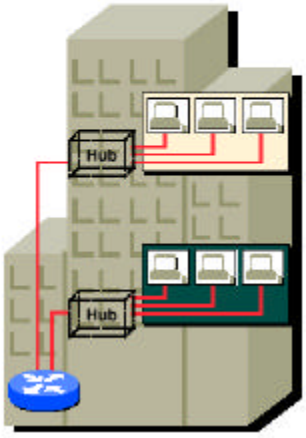

- Subnets are tied to hubs
- Users grouped by location
- No security on segment
- Addressing is constrained
- Moves require address changes

Transition to Switched LANs

Substantial Shifts in Network Design

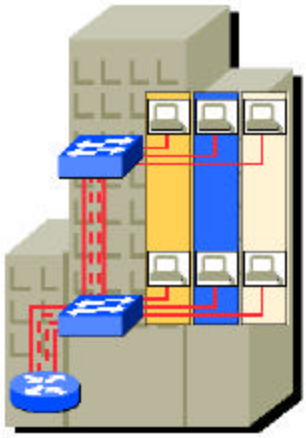

- Collision domains are reduced
- Switch port intelligence in wiring closet
- Physical boundaries are removed
- Users are grouped logically
- Greater control of bandwidth and network changes
- Management is centralized
- Routing for inter-VLAN communication

Centralizing Server Resources

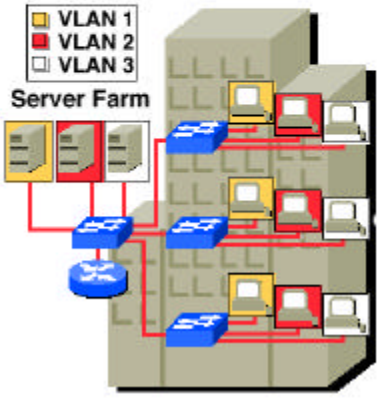

- Servers centralized for administration, security
- Switch to server-dedicated links
- VLANs maintain workgroup association

Reducing Administrative Tasks

Change Management

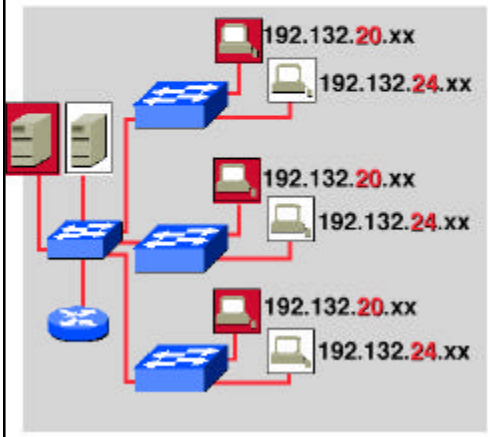

- Switches remove constraints
  - Logical grouping of users
  - Multiple subnets per floor
  - Single subnet across floors
  - Subnet conservation
  - Dynamic server registration

Establishing VLAN Membership

- Port driven
- MAC address driven
- Network address driven
- Application type driven

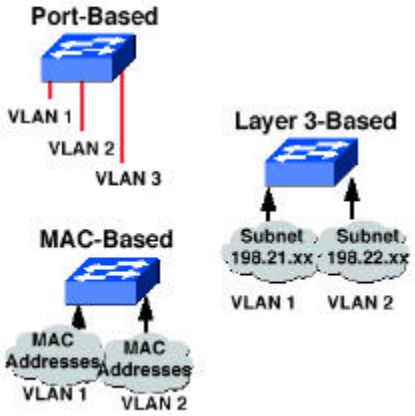

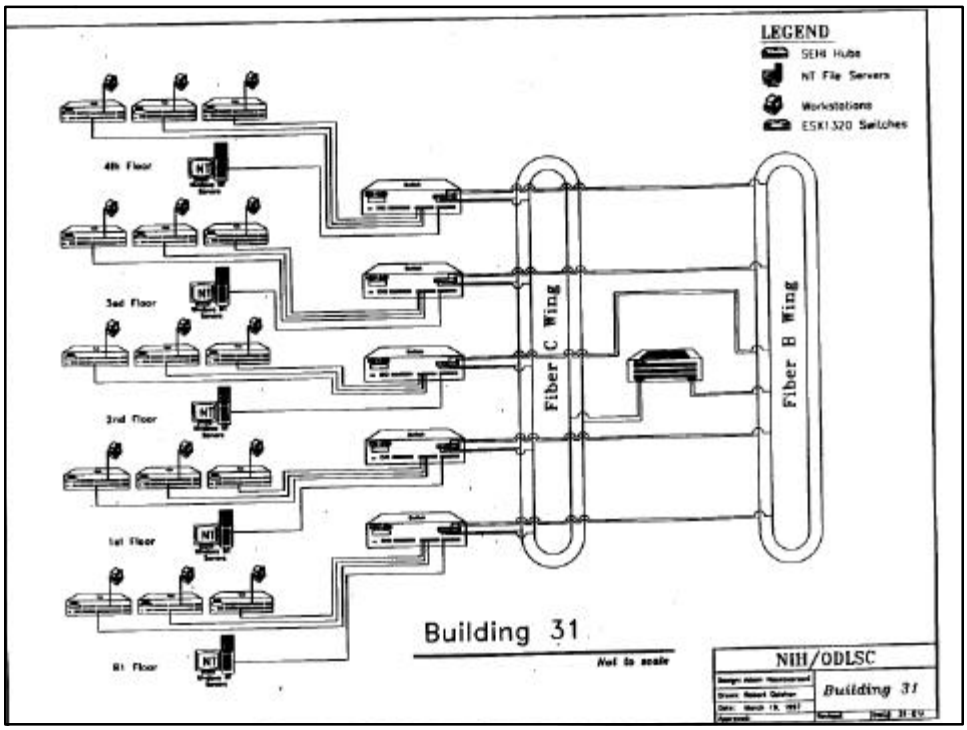

Articles